cata

DECORATIVES

NEW

AUTO

THALASSA BK

extra led | AUTO | 90 cm | 80 cm | 70 cm | 60 cm | A+++

A+ POWER+ SILENT
BRUSHLESS motor

THALASSA 900XGBK
Cod. **02159404** EAN **8422248093750**

- **Touch Control Panel** with digital display, authomatic shut-down timer and cleaning filters indicator
- **AUTO connectivity with automatic control from the CATA hob**
- 6 extraction levels, 5 + **1 TURBO**
- Extraction power (according to UNE/EN 61591): **842m³/h** - 283m³/h
- Maximum air flow (free outlet): **1200m³/h**
- **Sound power (Reg.(EU) nº65/2014): 46dB(A)**, maximum: 64dB(A)
- BRUSHLESS motor. Ultra silent. Maximum energy consumption **135W**
- **High-efficiency lighting by intensity-adjustable two-tone warm / natural LED STRIP**
- Easy-to-install system
- **Non-condensation filter and Filter condensation collection area**
- Dishwasher-washable filters
- Front panel with **opening for intensive use**
- Black/white/Grey glass finishing
- Max. Pressure: 357 Pa
- 150/125 mm outlet diameter
- **Energy Class: A+++**

► **Accessories (not included)**

Active charcoal filter ..... Cod. 02859399 / EAN 8422248086943
Check valve ..... Cod. 02832008 / EAN 8422248086837
Top tub BK ..... Cod. 02861403 / EAN 8422248078818
Top tub WH ..... Cod. 02861003 / EAN 8422248097765
Top tub INOX ..... Cod. 02861303 / EAN 8422248097758

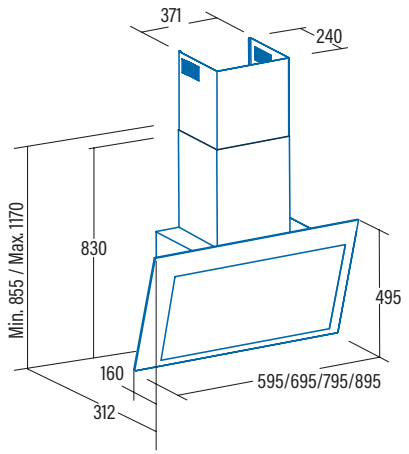

Code	**02159404**
EAN	**8422248093750**
Model	**THALASSA 900XGBK**
Type	Vertical
Product fiche according to directives EU65/2014 - EN61591, EN60704-2-13, EN50564	
AEC (Anual Energy consumption) (kWh/annum)	14,5
EEI class (Energy Efficiency Class)	A+++
FDE (Fluid Dynamic Efficiency)	39,7
FDE class (Fluid Dynamic Efficiency Class)	A
LE (Lighting Efficiency) (lux/W)	26,3
LE class (Lighting Efficiency Class)	B
GFE (Grease Filtering Efficiency)	75,5
GFE Class (Grease Filtering Efficiency class)	C
Air flow at minimum speed (m³/h)	200
Air flow at maximum speed (m³/h)	605
Air flow at intensive speed (TURBO) (m³/h)	825
Sound Power Level at minimum speed (dB)	40
Sound Power Level at maximum speed (dB)	64
Sound Power Level at intensive speed (TURBO) (dB)	69
Po (Power Consumption in off mode) (W)	0,4
Ps (Power Consumption in standby) (W)	0
Integration directive EU 66/2014	
f (Time Increase Factor)	0,6
EEI (Energy Efficiency Index)	29,3
QBEP (Flow Rate at Best Efficiency Point) (m3/h)	259,7
PBEP (Static Pressure Difference at Best Efficiency Point) (Pa)	326,2
WBEP (Electric Power Input at Best Efficiency Point) (W)	59,2
WL (Nominal Power Consumption of Lighting system) (W)	3
EMIDDLE (Average Illumination of Lighting system on Cooking surface) (lux)	79
External Dimensions	
Width (mm)	900
Depth (mm)	312
Total max height (mm)	1170
Total min height (mm)	855
Outlet Diameter (mm)	150/125
Characteristics	
Motor	BT4DC
Extraction Levels	5 + 1
Motor Maximum Power Consumption	140
Maximum Pressure	357
Intensive Speed (TURBO) Pressure	365
Control Type	TCD6i
Automatic shut-down timer	√
Electronic Filter Saturation Indicator	√
Filter Type	Metallic
Anti-grease Filter Number	2+1
Inner Shield	-
Lighting	
Light Type	SS Led
Adjustable Intensity Lighting	√
Nº of Lamps	1
Installation	
Minimum height distance to a electric worktop hob (mm)	400
Minimum height distance to a gas worktop hob (mm)	650
Instalation with Outlet tube to the exterior / Recirculating	BOTH
Easy Instalation System	√
Electric Connection	
Total Rush Power (W)	143
Rated Voltage (V)	220-240
Network Frequency (Hz)	50
Electrical Insulation Class	CLASS I
Plug	-
Accessories	
Upper Decorative tube Extension	02861303
White Decorative Tube	-
Black Decorative Tube	02861403
Island Tube Enhancer	-
Check Valve	02832008
MAX PRO Metal Filter	-
Metal Filter	02800905* / 02800925*
DUAL Filter (metal + active charcoal)	02800918 / 02800927
Active Charcoal Filter	02859399
Noiseless Flexible Duct	02893002